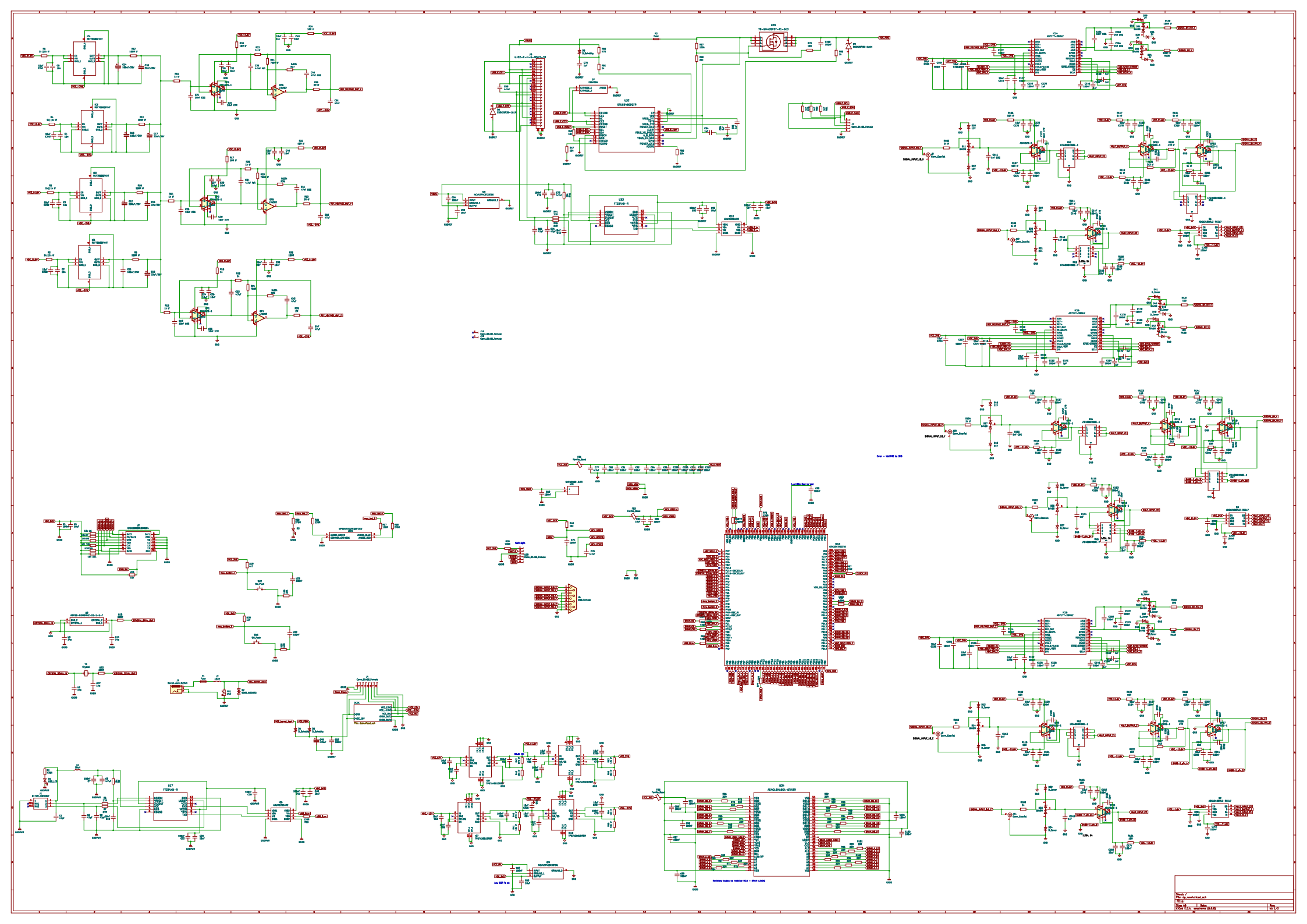
Sheet /
File: dp_mark_lead.sch
Title:
Size: A0 Date:
KiCad E.D.A. eeschema (5.0.0)
Rev:
Id: 1/1

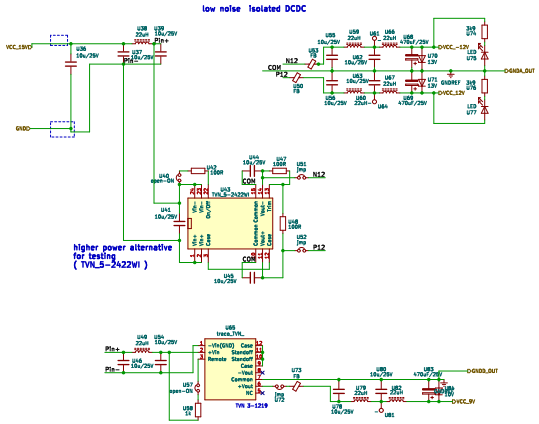

Sheet: /DCDC/
File: dcdc.kicad_sch
Title:
Size: A1 | Date: | Rev:
KiCad E.D.A. eeschema (6.0.0) | Id: 2/2